DGT Aluminum Anti-glare Downlight 50W 210mm

DGT LED LIGHTING SERIES

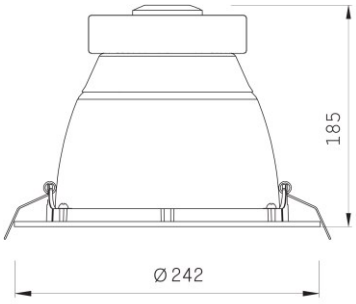

Ø210

MODEL	CS-DGT-MQ-7357-50W-3000K-60D CS-DGT-MQ-7357-50W-4000K-60D CS-DGT-MQ-7357-50W-5000K-60D	**IP**	20
INPUT VOLTAGE (V)	220-240V AC	**AMBIENT TEMPERATURE (°C)**	25°C
POWER FACTOR (PF)	>0.8	**OPERATING TEMPERATURE (°C)**	-20 to +40°C
WATTAGE (W)	50W	**DIMMABLE**	Yes
LUMEN OUTPUT (LM)	3195 (+/-10%) LM	**INSTALLATION TYPE**	Recessed
COLOUR TEMPERATURE	3000K / 4000K / 5000K	**CUT-OUT (mm)**	Ø210 (+/-5) mm
BEAM ANGLE (°)	60°	**DIMENSION (mm)**	Ø242 x H185 mm
CRI (Ra)	90	**NET WEIGHT (kg)**	1.36 kg
SDCM	5	**LIFESPAN (hr.)**	35,000 hrs.
UGR	22	**WARRANTY (yr.)**	5 yrs.
HOUSING COLOUR & MATERIAL	White, aluminum	**COMPLIANCE**	SAA

Yiyun Corporation Pty Ltd | All information in this catalogue is subject to change at business discretion.
Please contact the office for confirmation of pricing and stock availability at time of order